PARCHE BRIDGE FAUCET / WITH SIDE SPRAY

7800-1

- MAX COUNTER THICKNESS 2-3/8"
- MINIMUM INSTALL HOLE SIZE 1-3/8"

A. Side Spray Connection with 1/4" NPT Pipe Fitting

B. Supply Hoses - 20" Long with 3/8" Compression Fittings

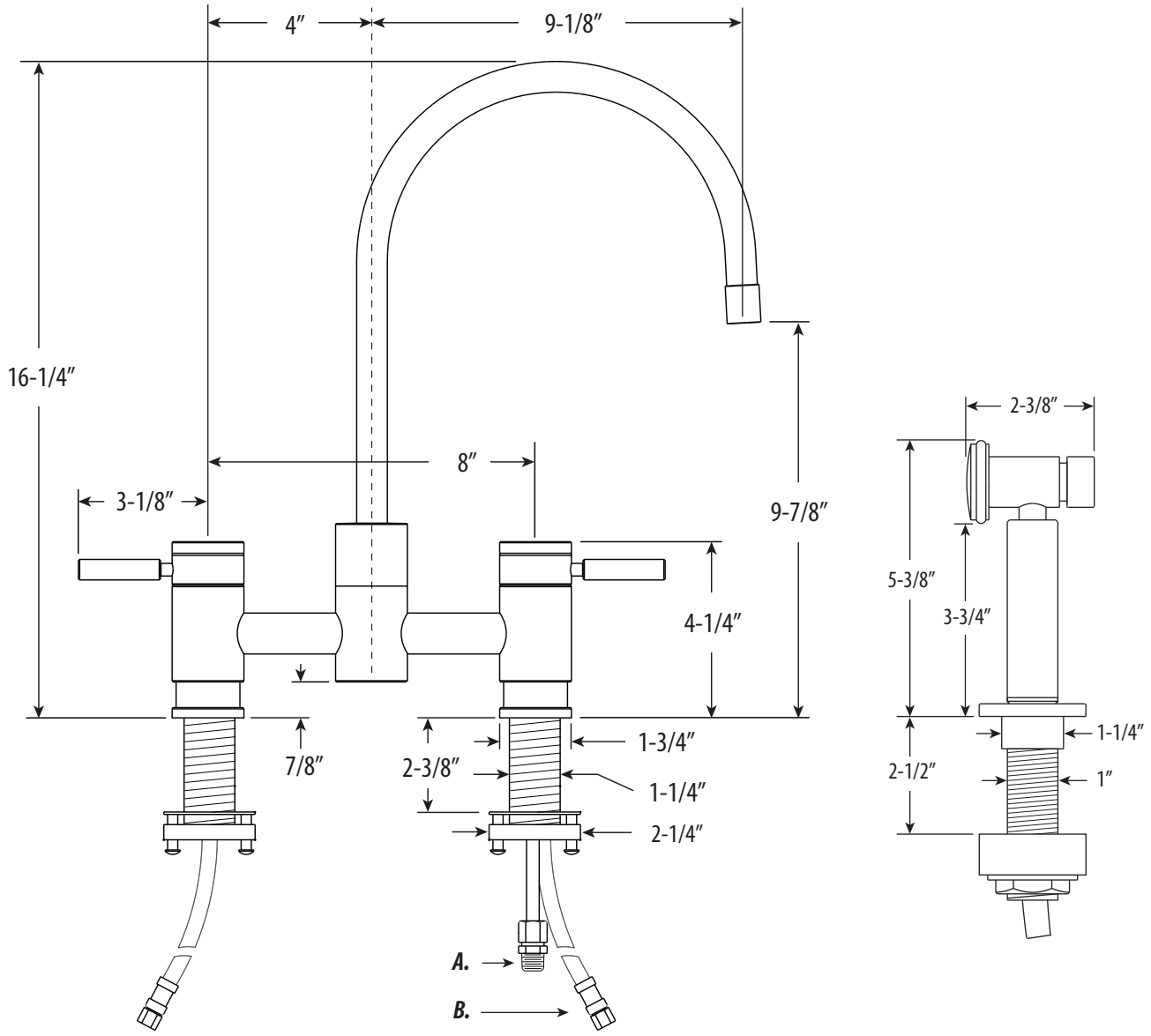

DIMENSIONS MAY VARY AND ARE SUBJECT TO CHANGE. NO RESPONSIBILITY IS ASSUMED FOR USE OF SUPERCEDED OR VOIDED DATA